BLOCK Contact
TERMINAL BLOCKS

BCB251-950 Series

9.50mm Pitch

RoHS

	c UL us
Rated Voltage	300V
Rated Current	25A
Insulation Withstand Voltage	AC 2000V / Min
Insulation Resistance	500MΩ or More at DC500V
Temperature Range	-40°C to +105°C
Wire Range	12-22 AWG
Screw Torque	1.0Nm

Units: mm

① Housing: PA66(V0)
② Solder Pin: Brass, Tin Plated
③ Screw: Steel, Nickel Plated

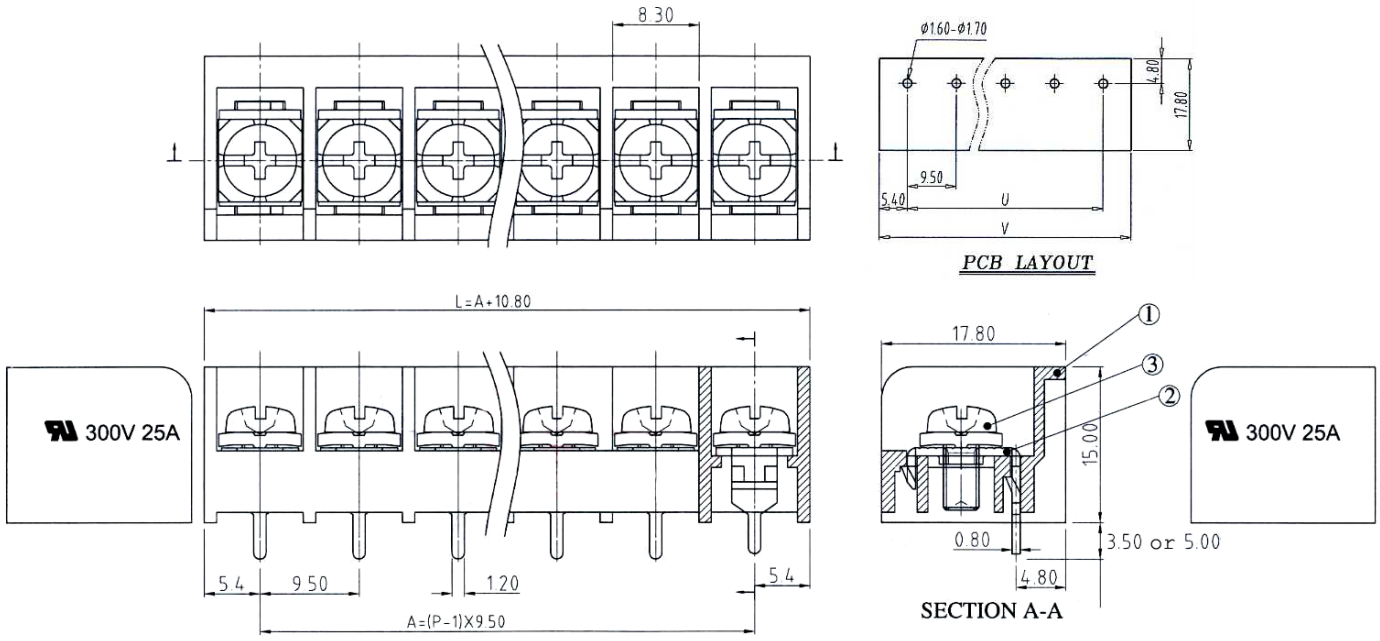

Part Numbering System:

BCB251-950 - XXP - XXX
① ② ③

① **Series**
② **Number of Poles: 02, 03, 04, ..., 15**
③ **Insulator Color: BLK3.5 = Black 3.50mm Pin Length.**
BLK = Black 5.00mm Pin Length.

# Pin	2	3	4	5	6	7	8	9	10	11	12	13
Dim L	20.3	29.8	39.3	48.8	58.3	67.8	77.3	86.8	96.3	105.8	115.3	124.8
Dim A	9.5	19.0	28.5	38.0	47.5	57.0	66.5	76.0	85.5	95.0	104.5	114.0
# Pin	14	15										
Dim L	134.3	143.8										
Dim A	123.5	133.0										